127x127x38.5 mm/5x1.5 inch, 145~86 CFM

TD12738

General specification

-Motor: Brushless DC, auto cutoff, auto restart, locking & polarity protection
-Motor Protection:
-Frame: Aluminum die cast, natural color treatment(AN) Option: Black color cosmetics(AP)
-Impeller: Glass fiber reinforced thermoplastic impeller, rated UL94V-0
-Bearing: Two high precision permanently lubricated ball bearings
-Rotation: CCW looking at rotor, air inlet side of housing, air outlet from struts
-Operating Temp: Ambient non-condensing allowable thermal range -15~+65C
-Storage Temp:
-Life Expectancy: Indoor free air running test MTBF 100K hours at 35C, 40K hours at 60C
-Dielectric Strength: 500 VAC/sec. Max leakage 500 micro amp
-Connection: Wire lead or Terminal flat pin connecting for choice
-Weight: 420 g (0.93 Lbs)

Model	Rated Voltage	Voltage Range	Input Power	Rated Current	Ref. Speed	Max Airflow		Max Pressure		Noise
	VDC	VDC	W	A	RPM	CFM	M3/Min	Inch/H2O	mm	dB
TD12738-HHH-5	5	4~6	9.5	1.9	2900	128	3.62	0.39	9.91	43
TD12738-HH-5	5	4~6	8	1.6	2600	113	3.20	0.35	8.89	40
TD12738-H-5	5	4~6	3.5	0.65	2300	100	2.83	0.31	7.87	36
TD12738-M-5	5	4~6	3	0.55	2000	90	2.55	0.27	6.86	32
TD12738-L-5	5	4~6	2	0.4	1700	75	2.12	0.21	5.33	28
TD12738-HHH-12	12	9~13.8	10.6	0.88	3100	138	3.91	0.4	10.16	45
TD12738-HH-12	12	9~13.8	8.4	0.7	2800	122	3.45	0.37	9.40	42
TD12738-H-12	12	9~13.8	6	0.5	2500	110	3.11	0.33	8.38	38
TD12738-M-12	12	9~13.8	4.8	0.40	2200	96	2.72	0.29	7.37	34
TD12738-L-12	12	9~14	2.4	0.20	1900	86	2.44	0.23	5.84	30
TD12738-HHH-24	24	12~27.6	10.3	0.43	3200	145	4.11	0.43	10.92	46
TD12738-HH-24	24	12~27.6	8.4	0.35	2900	128	3.62	0.39	9.91	43
TD12738-H-24	24	12~27.6	5.5	0.23	2600	115	3.26	0.35	8.89	40
TD12738-M-24	24	12~27.6	4.6	0.19	2200	96	2.72	0.29	7.37	34
TD12738-L-24	24	12~28	3.6	0.15	1900	86	2.44	0.23	5.84	30
TD12738-HHH-48	48	26~56	10.6	0.22	3200	145	4.11	0.43	10.92	46
TD12738-HH-48	48	26~56	7.7	0.16	2900	128	3.62	0.39	9.91	43
TD12738-H-48	48	26~56	5	0.1	2600	115	3.26	0.35	8.89	40
TD12738-M-48	48	26~58	3.8	0.08	2200	96	2.72	0.29	7.37	34
TD12738-L-48	48	28~60	3.4	0.07	1900	86	2.44	0.23	5.84	30

Related Product Information

Please see our related items below for suggested products to use with this item:

- Metal Fan Guard: TWG-127
- Plastic Fan Guard: TPG-127

Related Technical Information

-Optional Function Leads:

*Alarm, motor stop, cutoff sensor signals (L, run-Low, stop-High for alarm function, color yellow lead)
*Tach speed sensor output, open collector, 2 square waves per revolution ,or TTL 4.4~5 VDC optional (T, white lead)

*Speed control:

- H, NTC thermister thermal control 1800~3400RPM/4.7~10K ohm vs 45~20C(H, orange lead)
- P, Pulse Width Modulation, microprocessor programmable CPU speed control,10~100%, full stop & 10 speed stages; 800~3800RPM (P, purple lead)
- V, Control voltage speed setting, Analog 0~10V vs speed RPM speed control via separate DC low voltage interface (V, gray lead)

Fan Performance Curves and Dimension

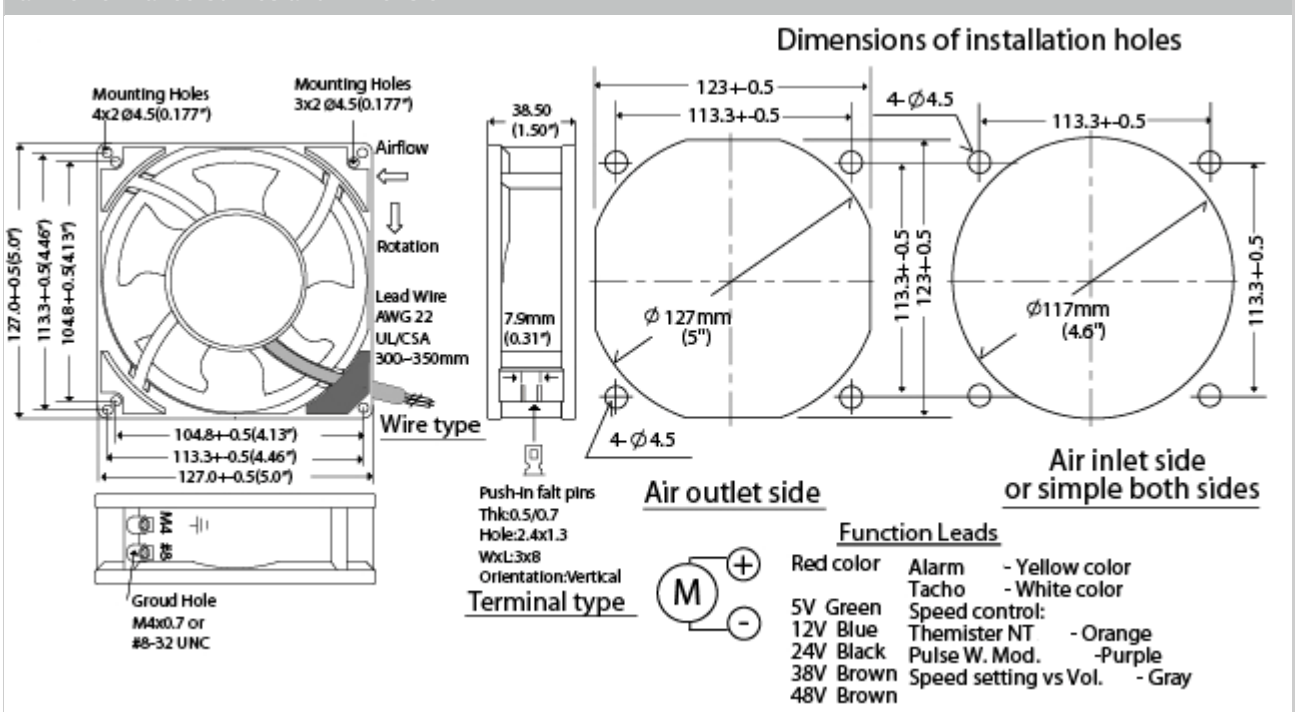

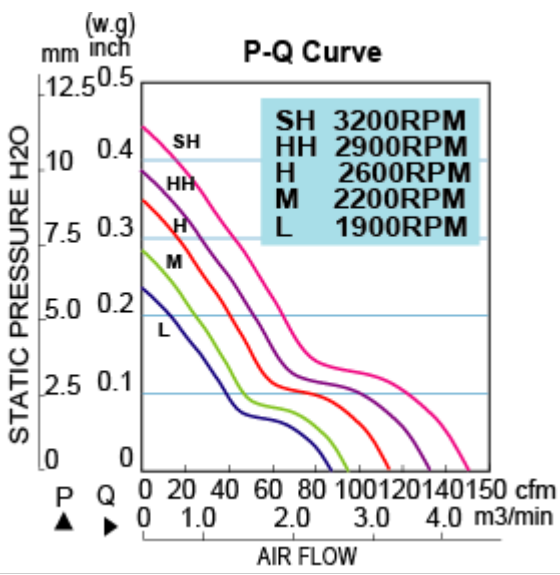

* TEI reserves the right to change data and specs without notice* Tests are at nominal rated voltage against zero static pressure*Specifications subject to change without notice, data tolerance +-10%

TEI, Inc., 3540 W. Sahara Ave., Las Vegas, NV, 89102
Tel: 702-220-7400; Fax: 775-628-8932; Email: sales@teifans.com